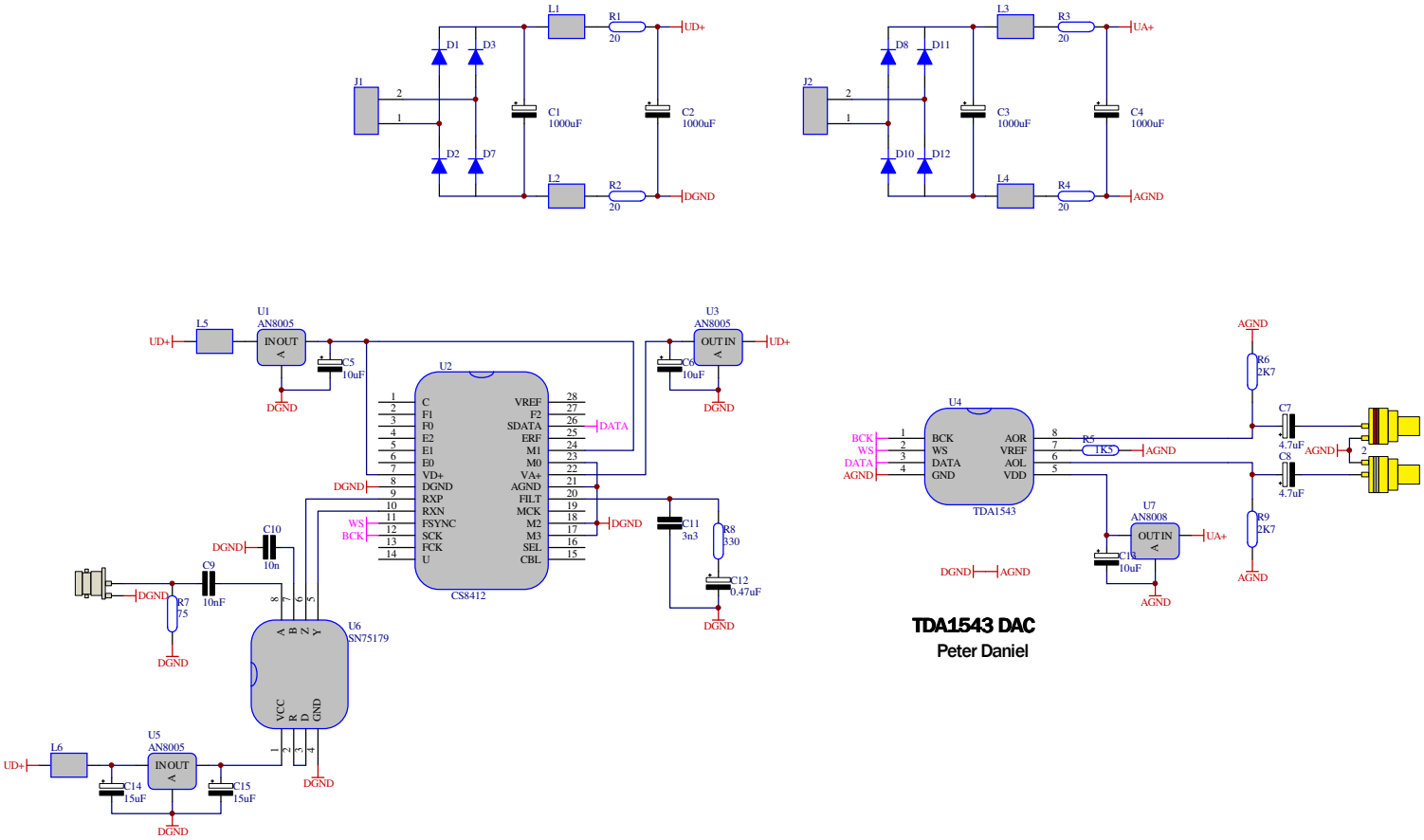

TDA1543 DAC

Peter Daniel